Centre Number	Candidate Number	Name

CAMBRIDGE INTERNATIONAL EXAMINATIONS
International General Certificate of Secondary Education

PHYSICS **0625/02**

Paper 2 Theory

October/November 2003

1 hour

Candidates answer on the Question Paper.
No Additional Materials are required.

READ THESE INSTRUCTIONS FIRST

Write your Centre number, candidate number and name on all the work you hand in.
Write in dark blue or black pen in the spaces provided on the Question Paper.
You may use a soft pencil for any diagrams, graphs or rough working.
Do not use staples, paper clips, highlighters, glue or correction fluid.

Answer **all** questions.
At the end of the examination, fasten all your work securely together.
The number of marks is given in brackets [ ] at the end of each question or part question.
You may lose marks if you do not show your working or if you do not use appropriate units.
Take the weight of 1 kg to be 10 N (i.e. acceleration of free fall = 10 m / s^2).

If you have been given a label, look at the details. If any details are incorrect or missing, please fill in your correct details in the space given at the top of this page.

Stick your personal label here, if provided.

For Examiner's Use

This document consists of **14** printed pages and **2** blank pages.

MML 4505 11/02 S53489/2
© UCLES 2003
UNIVERSITY of CAMBRIDGE
Local Examinations Syndicate
[Turn over
www.root19.com
+91 - 9969 353 391

1 **(a)** The block of wood in Fig. 1.1 will balance on a horizontal table.

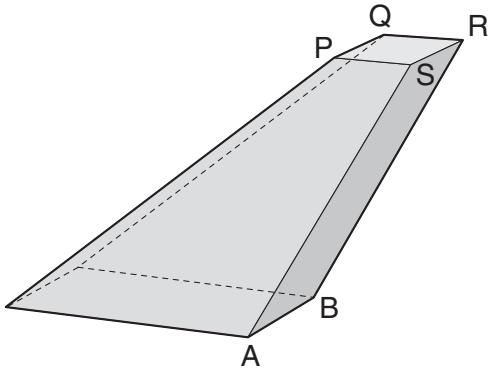

Fig. 1.1

If the block is tilted slightly clockwise about AB, it returns to its original position when released.

(i) On Fig. 1.1, mark with the letter G where the centre of mass of the block might be.

(ii) Small masses are added to the top PQRS of the block until it is just about to topple (fall over). Fig. 1.2 shows a side view of the block.

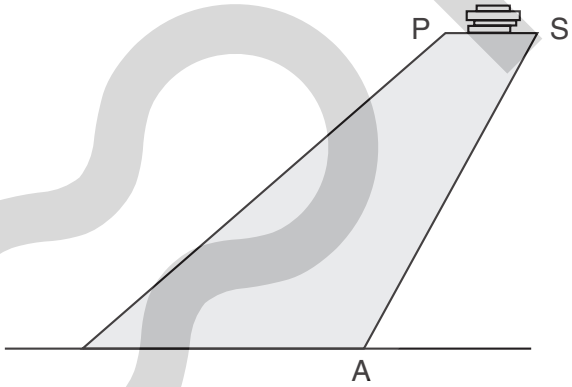

Fig. 1.2

On Fig. 1.2, draw a line along which the centre of mass of the arrangement must now lie.

[2]

(b) Fig. 1.3 shows two ways of using a laboratory retort stand.

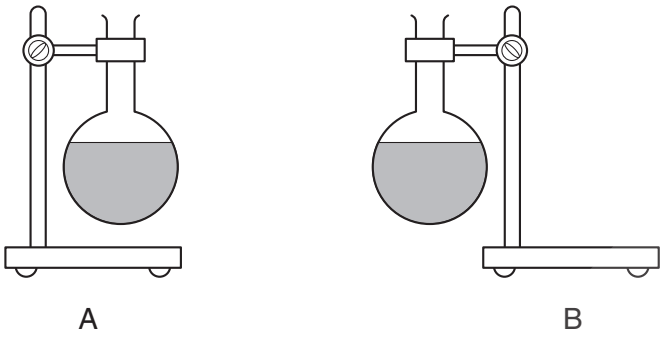

Fig. 1.3

Which diagram shows the safer arrangement? .....

Give a reason for your choice.

.....

..... [2]

(c) Some office filing cabinets have a mechanism that allows only one drawer to be opened at a time, as shown in Fig. 1.4.

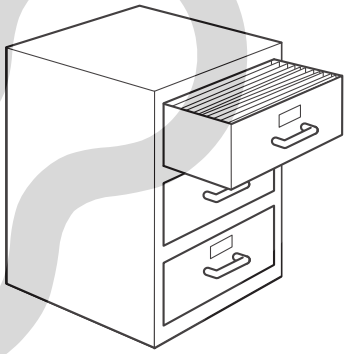

Fig. 1.4

Suggest why they have this mechanism.

.....

..... [1]

ROOT 19

2 A wheel is rotating at approximately 2 revolutions per second.

Describe how you would use a stopwatch to measure as accurately as possible the time for one revolution of the wheel. Make sure you include all the relevant information.

.....

.....

.....

.....

..... [5]

3 Fig. 3.1 shows a rock-fall down a mountain-side.

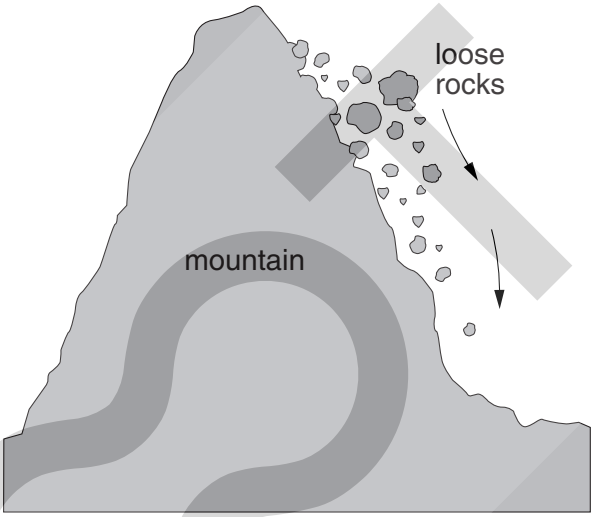

Fig. 3.1

The rocks higher up the mountain were disturbed by something and they roll down the mountain until they stop at the bottom. In the boxes below, write the name of the type of energy being described.

Before they fall, the rocks have this energy because of their position. [ ]

As the rocks are falling, their energy is changing to these other types of energy. [ ] [ ] [ ]

At the bottom, the only energy retained by the rocks is this type of energy. [ ]

[5]

4 **(a)** A farmer has two vehicles with the same weight and the same number of wheels. Fig. 4.1 shows what the wheels on these two vehicles look like.

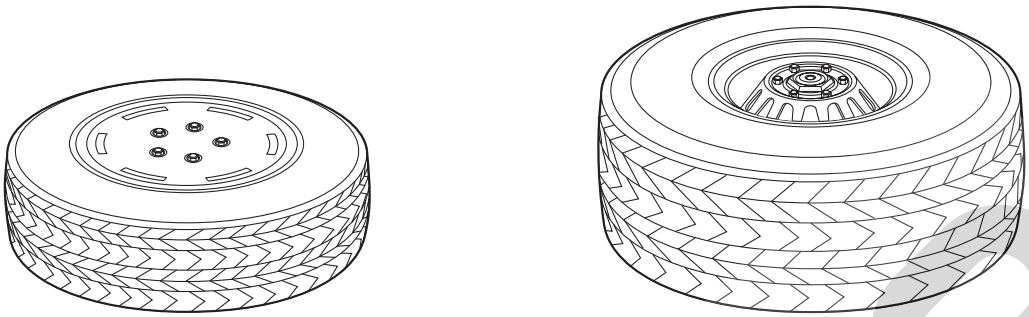

vehicle 1 vehicle 2

Fig. 4.1

Which vehicle should the farmer use when driving across his fields when the ground is very soft? Give your reasons.

vehicle .....

reasons .....

.....

..... [4]

(b) **(i)** If you stepped on the point of a sharp nail with your bare foot, it would be extremely painful. Explain, in terms of pressure, why this is so.

.....

.....

(ii) A person can lie on a bed of nail-points if there is a large number of nails. Explain why this is **not** extremely painful.

.....

.....

[5]

root 19

5 Fig. 5.1 shows two parallel rays of light, AB and CD, in a symmetrical glass block.

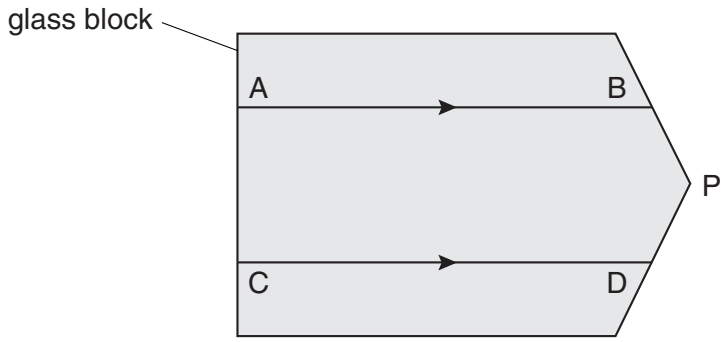

Fig. 5.1

(a) On Fig. 5.1,

(i) draw the ray AB before it entered the block at A,

(ii) draw the normal at B,

(iii) draw a ray which could emerge into the air at B,

(iv) draw the normal at D,

(v) draw a ray which could emerge into the air at D.

[5]

(b) State two things about the directions of the two rays emerging from the block.

1. .....

2. ..... [2]

(c) What might happen to a third ray in the block, parallel to the others, which reached the point P?

..... [1]

For Examiner's Use

6 **(a)** Here are three quantities that are associated with waves in the electromagnetic spectrum.

speed, wavelength, frequency

(i) Which of these is the same in a vacuum for both X-rays and radio waves?

.....

(ii) Which of these determines the colour of a ray of light?

.....

(iii) Which of these is the distance between two successive wavecrests?

..... [3]

(b) Which region of the electromagnetic spectrum has the shortest wavelength?

..... [1]

root 19

7 **(a)** The resistance of a piece of wire of constant diameter depends on its length.

On the axes of Fig. 7.1, sketch a graph to show how the resistance of the wire varies with length. [2]

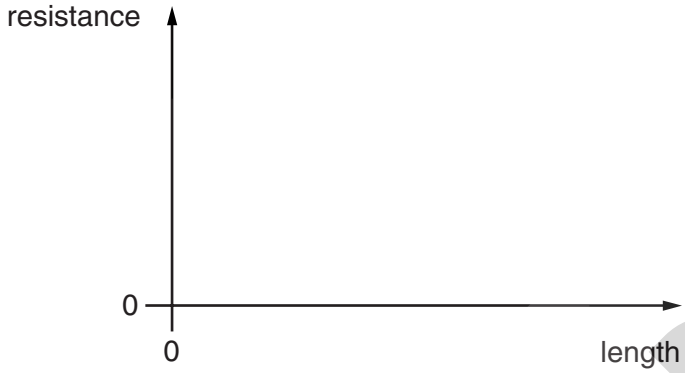

Fig. 7.1

(b) A reel contains 50 m of insulated wire. The ends of the wire are connected to the circuit shown in Fig. 7.2, so that the resistance of the wire can be found.

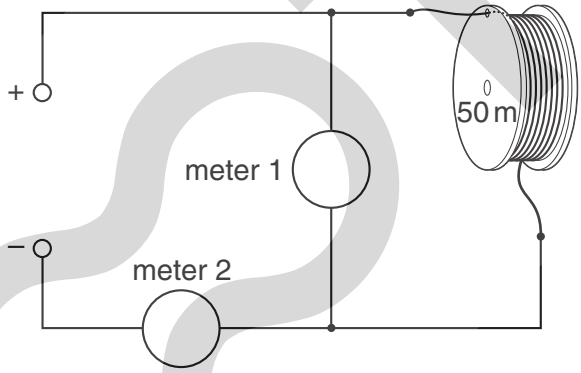

Fig. 7.2

(i) What sort of meter is meter 1? ..... [1]

(ii) Complete the sentence: "Meter 1 is measuring the ..... across the coil of wire." [1]

(iii) What sort of meter is meter 2? ..... [1]

(iv) Complete the sentence: "Meter 2 is measuring the ..... in the coil of wire." [1]

(v) The dials of the meters are shown in Figs. 7.3(a) and 7.3(b).

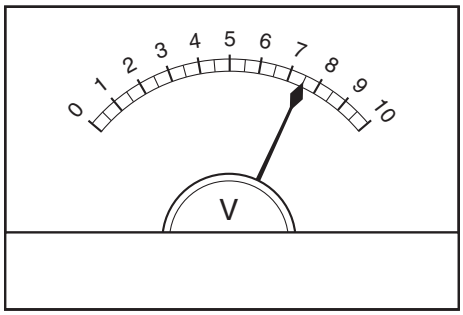

Fig. 7.3(a)

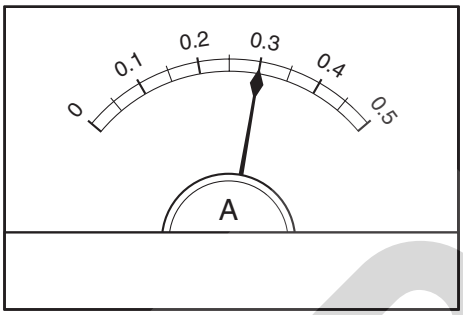

Fig. 7.3(b)

From the readings, calculate the resistance of the coil of wire.

resistance of coil = ... [5]

(vi) What is the resistance per metre of the wire?

resistance per metre = ... [2]

root 19

8 Fig. 8.1 shows the view, from above, of a sheet of cardboard on top of a bar magnet. The dotted line is the outline of the bar magnet.

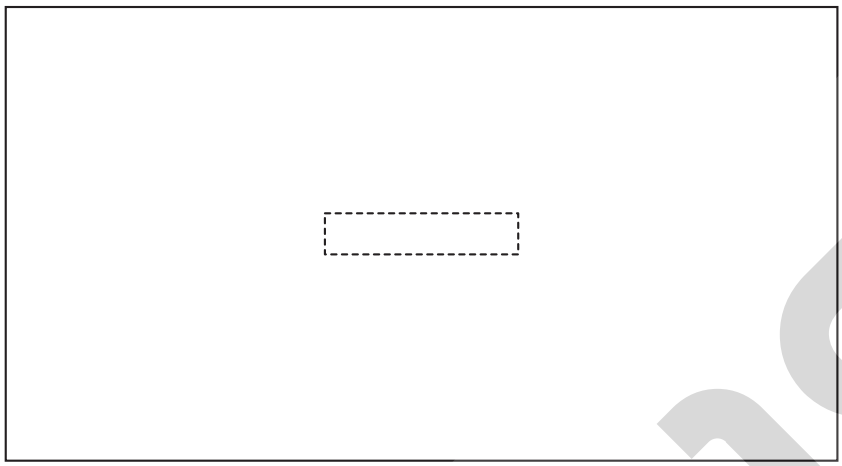

Fig. 8.1

(a) Describe how the pattern of the magnetic field round the bar magnet can be shown experimentally. If you wish, you may draw on Fig. 8.1 as well as write on the lines below.

.....

.....

.....

.....

.....

.....

.....

..... [4]

(b) State how you would identify the north pole of the magnet.

.....

..... [1]

root 19

9 **(a)** When a nucleus decays by emitting an α-particle, what happens to

(i) the number of neutrons in the nucleus,

.....

(ii) the number of protons in the nucleus,

.....

(iii) the charge on the nucleus?

.....
[5]

(b) On 1st January 1900, a sample of a particular radioactive nuclide had an activity of 3200 count / min. The nuclide has a half-life of 22 years. Calculate the activity of the nuclide remaining in the sample on 1st January 1966.

activity = ... count / min [4]

ROOT 19

10 In a spring-stretching experiment, the following values were found for the extension of the spring.

load / N	0	1	2	3	4	5	6	7
extension / mm	0	16	45	48	64	80	104	150

(a) Plot these values on the axes of Fig. 10.1. [3]

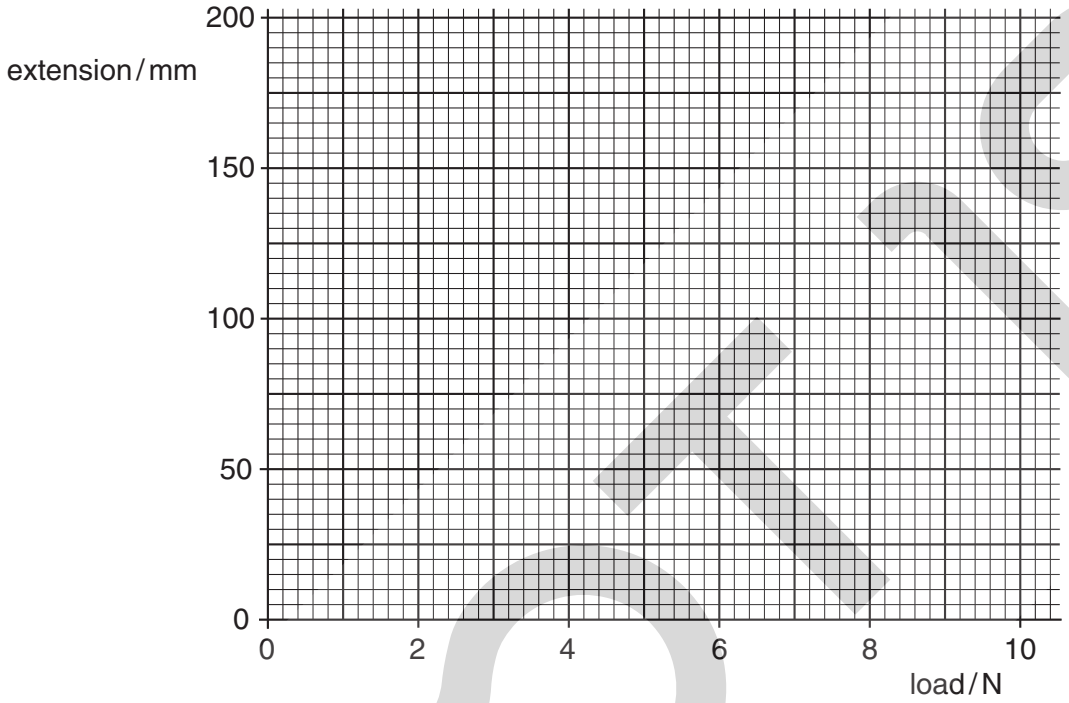

Fig. 10.1

(b) A mistake was made with measuring one of the extensions. On the table above, put a circle around the incorrect extension. [1]

(c) After a load of about 5 N, the graph begins to curve upwards.

Suggest what is happening to the spring when the load is greater than 5 N.

.....

..... [1]

(d) Describe how you would measure the extensions if you were doing this experiment.

.....

.....

.....

.....

.....

..... [3]

For Examiner's Use

11 Fig. 11.1 shows a mercury-in-glass thermometer, calibrated in °C.

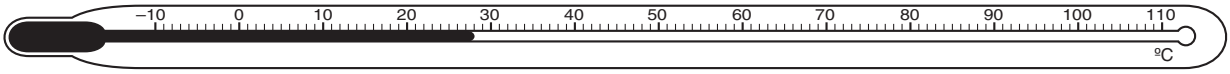

Fig. 11.1

(a) **(i)** What temperature would the thermometer read if put in steam, just above boiling water at standard pressure?

..... °C

(ii) What temperature would the thermometer read if put in pure melting ice?

..... °C

(iii) On Fig. 11.1, mark where the end of the mercury thread might be when the thermometer is in a freezer, where the temperature is well below the freezing point of water.

[3]

(b) The mercury-in-glass thermometer uses the expansion of a liquid to measure temperature. State another physical property that can be used to measure temperature.

..... [1]

12 In a country where the mains electricity supply is 240 V, the transformer in Fig. 12.1 is used to enable a 6 V lamp to be lit.

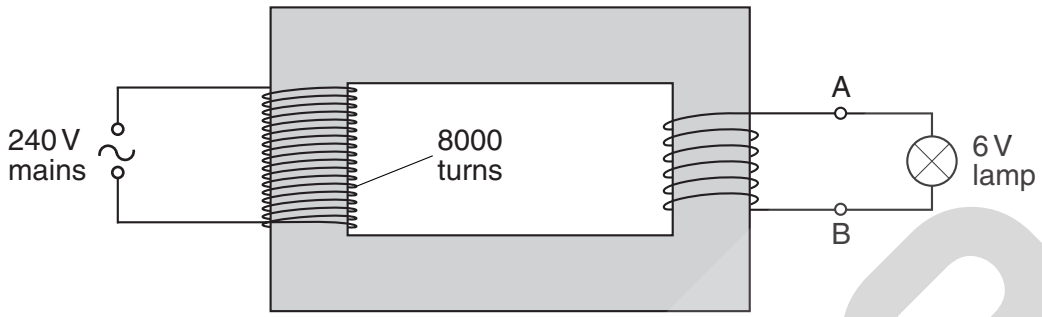

Fig. 12.1

(a) Calculate the number of turns needed on the secondary coil if the lamp is to be lit at normal brightness.

number of turns = ... [3]

(b) Without further calculation, state the number of secondary turns needed to light, at normal brightness,

(i) two identical 6 V lamps in parallel i.e.

number of turns = ...

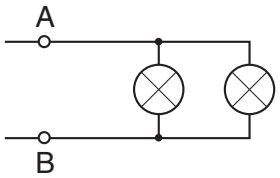

(ii) two identical 6 V lamps in series i.e.

number of turns = ...

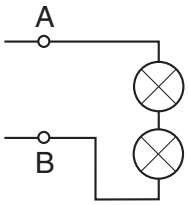

[2]

BLANK PAGE

root 19

BLANK PAGE

ROOT 19